OBJECTIVES: Students should be able to understand following contents after completing this course.

1. **Functional Diagram and Pin Configuration**
2. **Timing and Control Unit**
3. **Registers**
4. **Data and Address Bus**
5. **Flags**
6. **Interrupts**

Introduction of Intel 8085:

Microcomputer: The term microcomputer is generally synonymous with personal computer, or a computer that depends on a microprocessor.

- Microcomputers are designed to be used by individuals, whether in the form of PCs, workstations or notebook computers.
- A microcomputer contains a CPU on a microchip (the microprocessor), a memory system (typically ROM and RAM), a bus system and I/O ports, typically housed in a motherboard.

Microprocessor: A silicon chip that contains a CPU. In the world of personal computers, the terms microprocessor and CPU are used interchangeably.

- A microprocessor (sometimes abbreviated µP) is a digital electronic component with miniaturized transistors on a single semiconductor integrated circuit (IC).
- One or more microprocessors typically serve as a central processing unit (CPU) in a computer system or handheld device.
- Microprocessors made possible the advent of the microcomputer.
- At the heart of all personal computers and most working stations sits a microprocessor.
- Microprocessors also control the logic of almost all digital devices, from clock radios to fuel-injection systems for automobiles.
- Three basic characteristics differentiate microprocessors:
- Instruction set: The set of instructions that the microprocessor can execute.
- Bandwidth: The number of bits processed in a single instruction.
- Clock speed: Given in megahertz (MHz), the clock speed determines how many instructions per second the processor can execute.

In both cases, the higher the value, the more powerful the CPU. For example, a 32-bit microprocessor that runs at 50MHz is more powerful than a 16-bit microprocessor that runs at 25MHz.

In addition to bandwidth and clock speed, microprocessors are classified as being either RISC (reduced instruction set computer) or CISC (complex instruction set computer)

8085 Microprocessor

The Intel 8085 is an 8-bit microprocessor introduced by Intel in 1977. It was binary compatible with the more-famous Intel 8080 but required less supporting hardware, thus allowing simpler and less expensive microcomputer systems to be built. The "5" in the model number came from the fact that the 8085 requires only a +5-Volt (V) power supply rather than the +5 V, −5 V and +12 V supplies the 8080 needed. The main features of 8085 μP are:

- It is an 8-bit microprocessor.
- It is manufactured with N-MOS technology.
- It has 16-bit address bus and hence can address up to 2^{16}= 65536 bytes (64KB) memory locations through A0–A15.
- The first 8 lines of address bus and 8 lines of data bus are multiplexed AD0–AD7
- Data bus is a group of 8 lines D0–D7.
- It supports external interrupt request.
- A 16-bit program counter (PC)
- A 16-bit stack pointer (SP)
- Six 8-bit general purpose register arranged in pairs: BC, DE, HL.
- It requires a signal +5V power supply and operates at 3.2 MHZ single phase clock.
- It is enclosed with 40 pins DIP (Dual in line package).

8085 Functional diagram/ 8085 Internal Architecture

8085 consists of various units as shown in Fig below and each unit performs its own functions. The various units of a microprocessor are listed below

- Accumulator
- Arithmetic and logic Unit
- General purpose register
- Program counter
- Stack pointer
- Temporary register
- Flags
- Instruction register and Decoder
- Timing and Control unit
- Interrupt control
- Address buffer and Address-Data buffer
- Address bus and Data bus

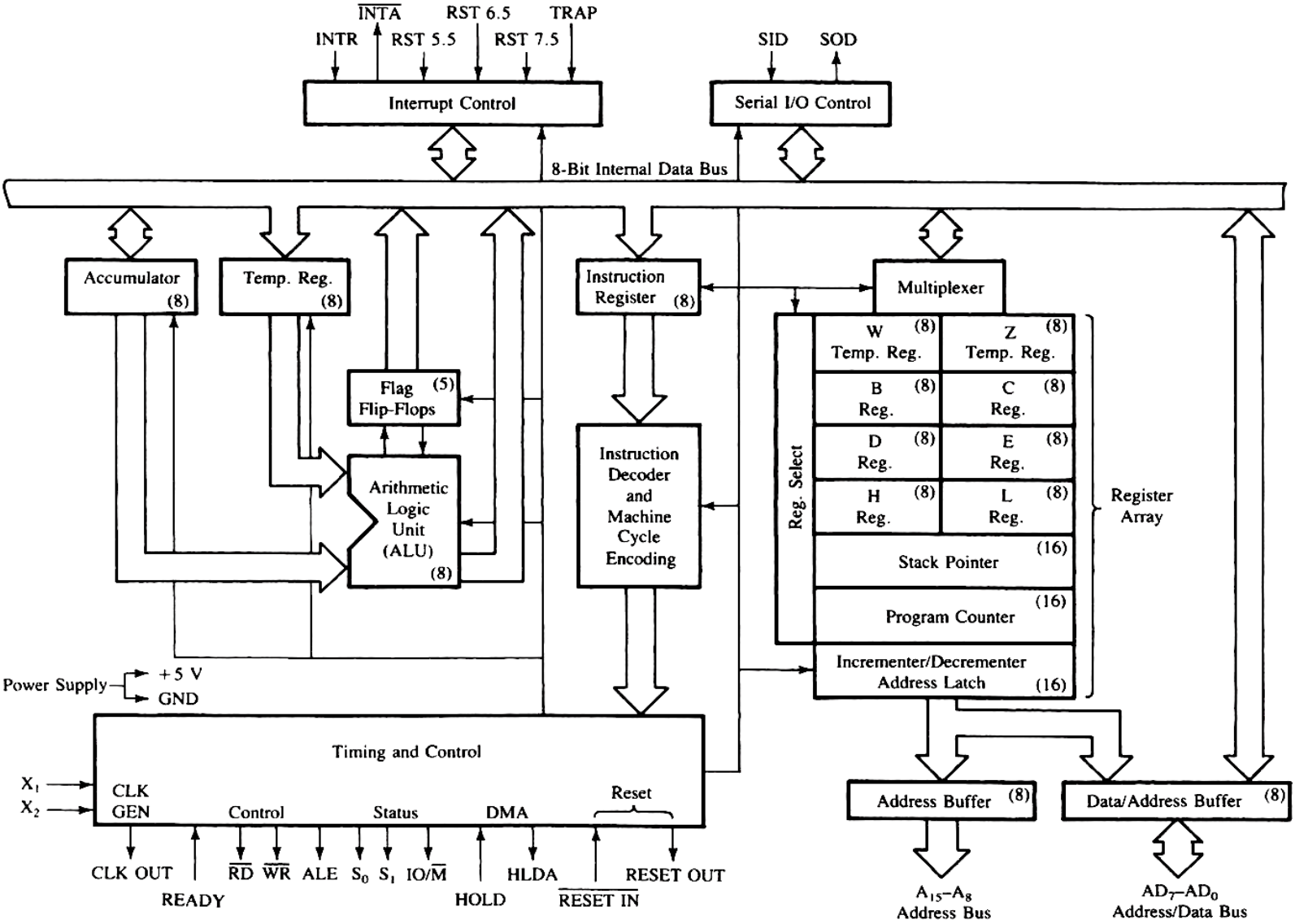

Accumulator

Accumulator is nothing but a register which can hold 8-bit data. Accumulator aids in storing two quantities. The data to be processed by arithmetic and logic unit is stored in accumulator. It also stores the result of the operation carried out by the Arithmetic and Logic unit. The accumulator is also called an 8-bit register. The accumulator is connected to Internal Data bus and ALU (arithmetic and logic unit). The accumulator can be used to send or receive data from the Internal Data bus.

Arithmetic and Logic Unit

There is always a need to perform arithmetic operations like +, -, *, / and to perform logical operations like AND, OR, NOT etc. So, there is a necessity for creating a separate unit which can perform such types of operations. These operations are performed by the Arithmetic and Logic Unit (ALU). ALU performs these operations on 8-bit data. But these operations cannot be performed unless we have an input (or) data on which the desired operation is to be performed. So, from where do these inputs reach the ALU? For this purpose, accumulator is used. ALU gets its Input from accumulator and temporary register. After processing the necessary operations, the result is stored back in accumulator.

General Purpose Registers

Apart from accumulator 8085 consists of six special types of registers called General Purpose Registers. These general-purpose registers are used to hold data like any other registers. The general-purpose registers in 8085 processors are B, C, D, E, H and L. Each register can hold 8-bit data. Apart from the above function these registers can also be used to work in pairs to hold 16-bit data. They can work in pairs such as B-C, D-E and H-L to store 16-bit data. The H-L pair works as a memory pointer. A memory pointer holds the address of a particular memory location. They can store 16-bit address as they work in pair.

Program Counter and Stack Pointer

Program counter is a special purpose register.

Consider that an instruction is being executed by processor. As soon as the ALU finished executing the instruction, the processor looks for the next instruction to be executed. So, there is a necessity for holding the address of the next instruction to be executed in order to save time. This is taken care by the program counter. A program counter stores the address of the next instruction to be executed. In other words, the program counter keeps track of the memory address of the instructions that are being executed by the microprocessor and the memory address of the next instruction that is going to be executed.

Microprocessor increments the program whenever an instruction is being executed, so that the program counter points to the memory address of the next instruction that is going to be executed. Program counter is a 16-bit register. **Stack pointer** is also a 16-bit register which is used as a memory pointer. A stack is nothing but the portion of RAM (Random access memory).

So, does that mean the stack pointer points to portion of RAM?

Yes. Stack pointer maintains the address of the last byte that is entered into stack.

Each time when the data is loaded into stack, Stack pointer gets decremented. Conversely it is incremented when data is retrieved from stack.

Temporary Register

As the name suggests this register acts as a temporary memory during the arithmetic and logical operations. Unlike other registers, this temporary register can only be accessed by the microprocessor and it is completely inaccessible to programmers. Temporary register is an 8-bit register.

Flags

Flags are nothing but a group of individual Flip-flops. The flags are mainly associated with arithmetic and logic operations. The flags will show either a logical (0 or 1) (i.e.) a set or reset depending on the data conditions in accumulator or various other registers. A flag is actually a latch which can hold some bits of information. It alerts the processor that some event has taken place.

D_7	D_6	D_5	D_4	D_3	D_2	D_1	D_0
S	Z		AC		P		CY

Fig. 1.2 Flag Register Intel processors have a set of 5 flags.

1. Carry flag
2. Parity flag
3. Auxiliary carry flag
4. Zero flag
5. Sign flag

Consider two binary numbers.

For example

1100 0000
1000 0000

When we add the above two numbers, a carry is generated in the most significant bit. The number in the extreme right is least significant bit, while the number in extreme left is most significant bit. So, a ninth bit is generated due to the carry. So how to accommodate 9th bit in an 8-bit register?

For this purpose, the Carry flag is used. The carry flag is set whenever a carry is generated and reset whenever there is no carry. But there is an auxiliary carry flag? What is the difference between the carry flag and auxiliary carry flag?

Let's discuss with an example. Consider the two numbers given below

0000 1100
0000 1001

When we add both the numbers a carry is generated in the fourth bit from the least significant bit. This sets the auxiliary carry flag. When there is no carry, the auxiliary carry flag is reset. So, whenever there is a carry in the most significant bit Carry flag is set. While an auxiliary carry flag is set only when a carry is generated in bits other than the most significant bit.

Parity checks whether it's even or add parity. This flag returns a 0 if it is odd parity and returns a 1 if it is an even parity. Sometimes they are also called as parity bit which is used to check errors while data transmission is carried out.

Zero flag shows whether the output of the operation is 0 or not. If the value of Zero flag is 0 then the result of operation is not zero. If it is zero the flag returns value 1.

Sign flag shows whether the output of operation has positive sign or negative sign. A value 0 is returned for positive sign and 1 is returned for negative sign.

Instruction Register and Decoder

Instruction register is 8-bit register just like every other register of microprocessor. Consider an instruction. The instruction may be anything like adding two data's, moving a data, copying a data etc. When such an instruction is fetched from memory, it is directed to Instruction register. So, the instruction registers are specifically to store the instructions that are fetched from memory. There is an Instruction decoder which decodes the information present in the Instruction register for further processing.

Timing and Control Unit

Timing and control unit is a very important unit as it synchronizes the registers and flow of data through various registers and other units. This unit consists of an oscillator and controller sequencer which sends control signals needed for internal and external control of data and other units. The oscillator generates two-phase clock signals which aids in synchronizing all the registers of 8085 microprocessor.

Signals that are associated with Timing and control unit are:

Control Signals: RD', WR', ALE

- ALE is used for provide control signal to synchronize the components of microprocessor and timing for instruction to perform the operation.
- RD (Active low) and WR (Active low) are used to indicate whether the operation is reading the data from memory or writing the data into memory respectively.

Status Signals: S0, S1, IO/M'

- IO/M (Active low) is used to indicate whether the operation belongs to the memory or peripherals.

Table 1.1 Status signals and the status of data bus

IO/M' (Active Low)	S1	S2	Data Bus Status (Output)
0	0	0	Halt
0	0	1	Memory WRITE
0	1	0	Memory READ
1	0	1	IO WRITE
1	1	0	IO READ

0	1	1	Op code fetch
1	1	1	Interrupt acknowledge

DMA Signals: HOLD, HLDA, READY

- HOLD: Indicates that another master is requesting the use of the address and data buses. The CPU, upon receiving the hold request, will relinquish the use of the bus as soon as the completion of the current bus transfer. Internal processing can continue. The processor can regain the bus only after the HOLD is removed. When the HOLD is acknowledged, the Address, Data RD, WR and IO/M' lines are tri-stated.
- HLDA: Hold Acknowledge: Indicates that the CPU has received the HOLD request and that it will relinquish the bus in the next clock cycle HLDA goes low after the Hold request is removed. The CPU takes the bus one half-clock cycle after HLDA goes low.
- READY: This signal synchronizes the fast CPU and the slow memory, peripherals. If READY is high during a read or write cycle, it indicates that the memory or peripheral is ready to send or receive data. If READY is low, the CPU will wait an integral number of clock cycle for READY to go high before completing the read or write cycle. READY must conform to specified setup and hold times.

Reset Signals: $\overline{\text{Reset in}}$, Reset Out RESET IN: A low on this pin;

- Sets the program counter to zero (0000H)
- Resets the interrupt enables and HLDA flip-flops.
- Tri-states the data bus, address bus and control bus.
- Affects the content of processors internal registers randomly. On Reset, The Program counter sets to 0000h which causes the 8085 to execute; the first instruction from address 0000H.
- RESET OUT: This active high signal indicates that the processor; is being reset. This signal is synchronized to the processor clock and it can be used to reset other devices connected in the system.

Interrupt control

As the name suggests this control interrupts a process. Consider that a microprocessor is executing the main program. Now whenever the interrupt signal is enabled or requested the microprocessor shifts the control from main program to process the incoming request and after the completion of request, the control goes back to the main program. For example, an Input/output device may send an interrupt signal to notify that the data is ready for input. The microprocessor temporarily stops the execution of main program and transfers control to I/O

device. After collecting the input data, the control is transferred back to main program. Interrupt signals present in 8085 are:

- INTR
- RST 7.5
- RST 6.5
- RST 5.5
- TRAP

INTR is maskable 8080A compatible interrupt. When the interrupt occurs the processor fetches from the bus one instruction, usually one of these instructions: One of the 8 RST instructions (RST0 - RST7). The processor saves current program counter into stack and branches to memory location N * 8 (where N is a 3 - bit number from 0 to 7 supplied with the RST instruction).
CALL instruction (3-byte instruction). The processor calls the subroutine, address of which is specified in the second and third bytes of the instruction.
RST5.5 is a maskable interrupt. When this interrupt is received the processor saves the contents of the PC register into stack and branches to 2CH (hexadecimal) address.
RST6.5 is a maskable interrupt. When this interrupt is received the processor saves the contents of the PC register into stack and branches to 34H (hexadecimal) address.
RST7.5 is a maskable interrupt. When this interrupt is received the processor saves the contents of the PC register into stack and branches to 3CH (hexadecimal) address.
TRAP is a non-maskable interrupt. When this interrupt is received the processor saves the contents of the PC register into stack and branches to 24H (hexadecimal) address.
All maskable interrupts can be enabled or disabled using EI and DI instructions. RST5.5, RST6.5 and RST7.5 interrupts can be enabled or disabled individually using SIM instruction.

Application of Maskable and Non Maskable interrupt

In simple language, maskable interrupts are those which can be disable by the programmer. That means, when disabled, even if the interrupt comes, the CPU simply ignores it and doesn't provide a service to it while a non maskable interrupt (NMI) is that which can't be disabled and when comes, MuP has to provide a service to it.
The masking is done at times when MuP is executing critical time delays or a section of code that can't be interrupted in the middle.
Now the reason to provide NMI is that in case of emergencies or failures, NMI can be used to shut a system down or when the processor is hanged, NMI is used to recover the processor and bring it back to normal. Best e.g. is that when your PC hangs and even the Crtl+Alt+Del doesn't work, as a last resort what you do is press the reset button to bring back your PC in normal operating mode.

Serial Input/output control

The input and output of serial data can be carried out using 2 instructions in 8085.

- SID-Serial Input Data
- SOD-Serial Output Data

Two more instructions are used to perform serial-parallel conversion needed for serial I/O devices.

- SIM
- RIM

Address buffer and Address-Data buffer

The contents of the stack pointer and program counter are loaded into the address buffer and address-data buffer. These buffers are then used to drive the external address bus and address-data bus. As the memory and I/O chips are connected to these buses, the CPU can exchange desired data to the memory and I/O chips.

The address-data buffer is not only connected to the external data bus but also to the internal data bus which consists of 8-bits. The address data buffer can both send and receive data from internal data bus.

Address bus and Data bus

We know that 8085 is an 8-bit microprocessor. So, the data bus present in the microprocessor is also 8-bits wide. So, 8-bits of data can be transmitted from or to the microprocessor. But 8085 processor requires 16-bit address bus as the memory addresses are 16-bit wide. The 8 most significant bits of the address are transmitted with the help of address bus and the 8 least significant bits are transmitted with the help of multiplexed address/data bus. The eightbit data bus is multiplexed with the eight least significant bits of address bus. The address/data bus is time multiplexed. This means for few microseconds, the 8 least significant bits of address are generated, while for next few seconds the same pin generates the data. This is called Time multiplexing. But there are situations where there is a need to transmit both data and address simultaneously. For this purpose, a signal called ALE (address latch enables) is used. ALE signal holds the obtained address in its latch for a long time until the data is obtained and so when the microprocessor sends the data next time the address is also available at the output latch. This technique is called Address/Data demultiplexing.

Qn: Explain different types of registers in 8085.

Ans:

Accumulator

General purpose register

Program counter

Stack pointer

Temporary register

Flags

Instruction register and Decoder